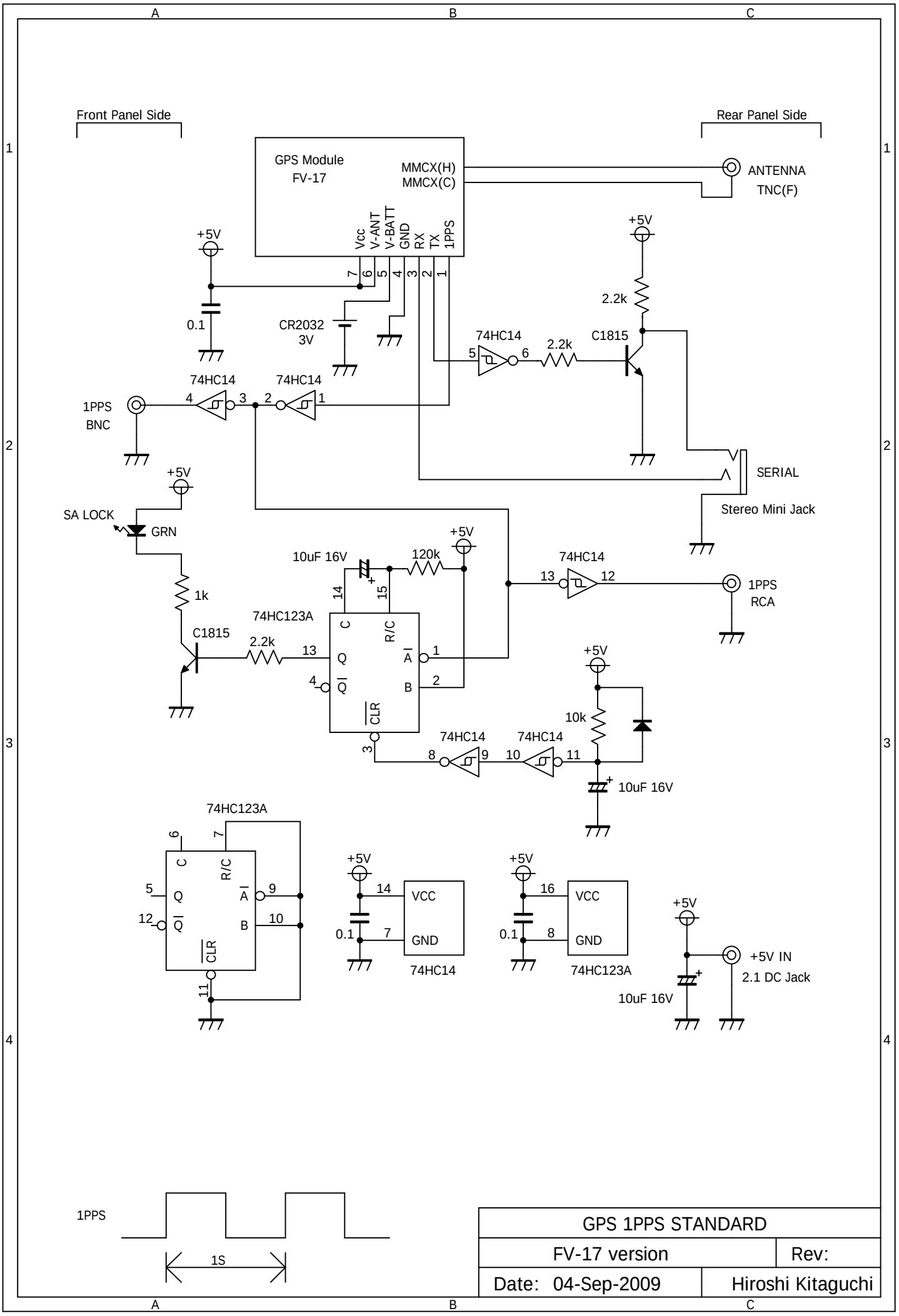

GPS 1PPS STANDARD	
FV-17 version	Rev:
Date: 04-Sep-2009	Hiroshi Kitaguchi