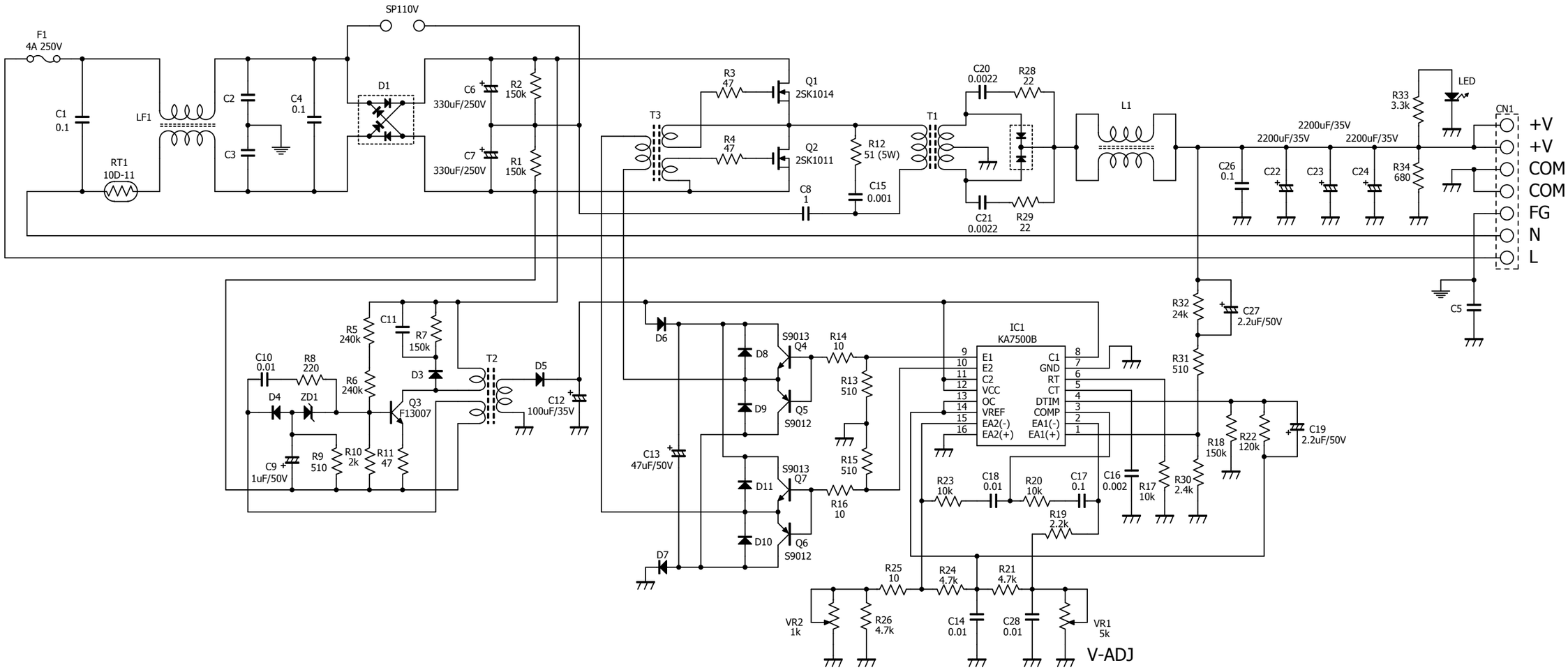

SOPUDAR SPD-240W (220V)	
DC OUTPUT 24V 10A	Rev:
Date: 04-Jul-2014	Hiroshi Kitaguchi