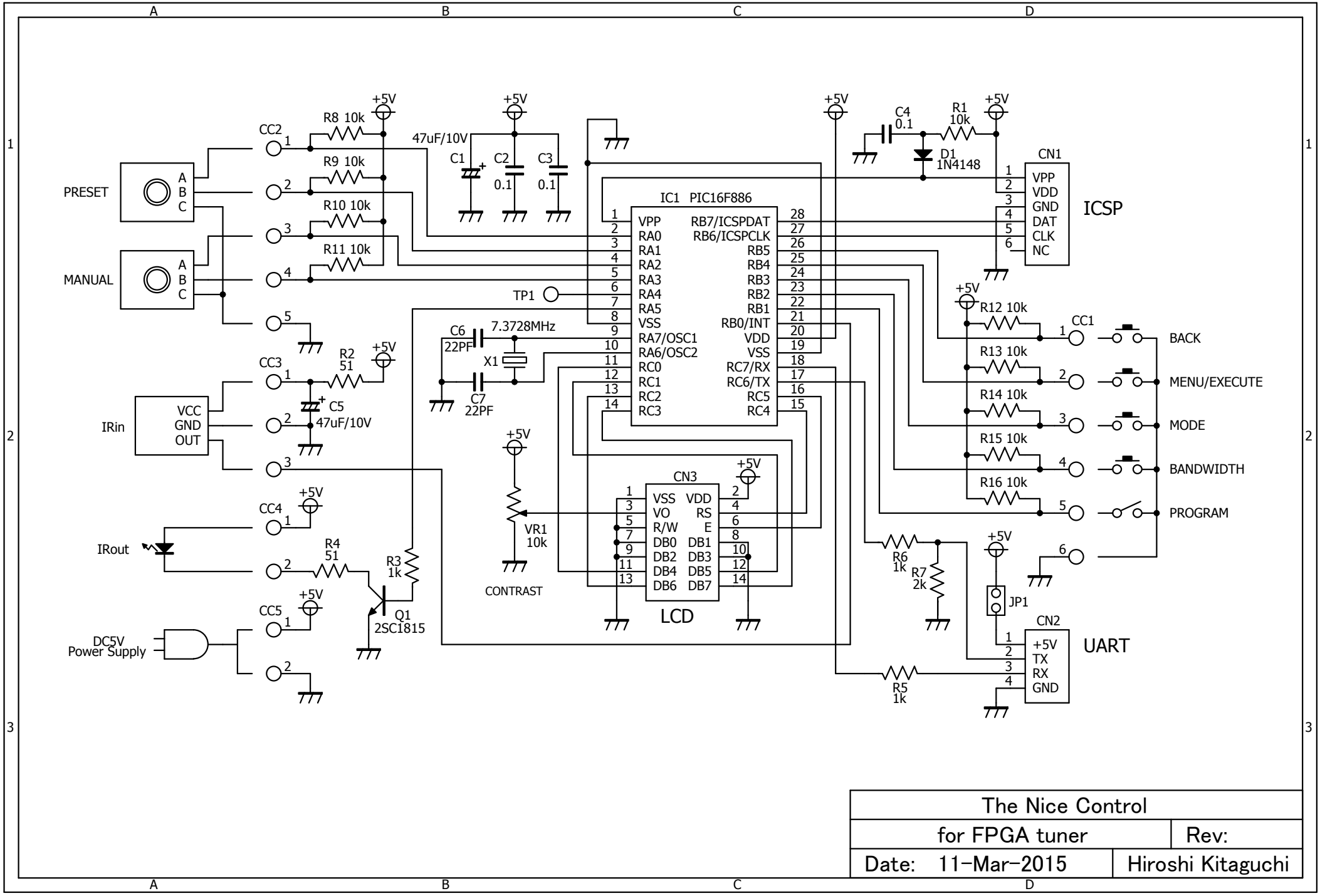

The Nice Control	
for FPGA tuner	Rev:
Date: 11-Mar-2015	Hiroshi Kitaguchi